Crane rails

DIN Standard

A65

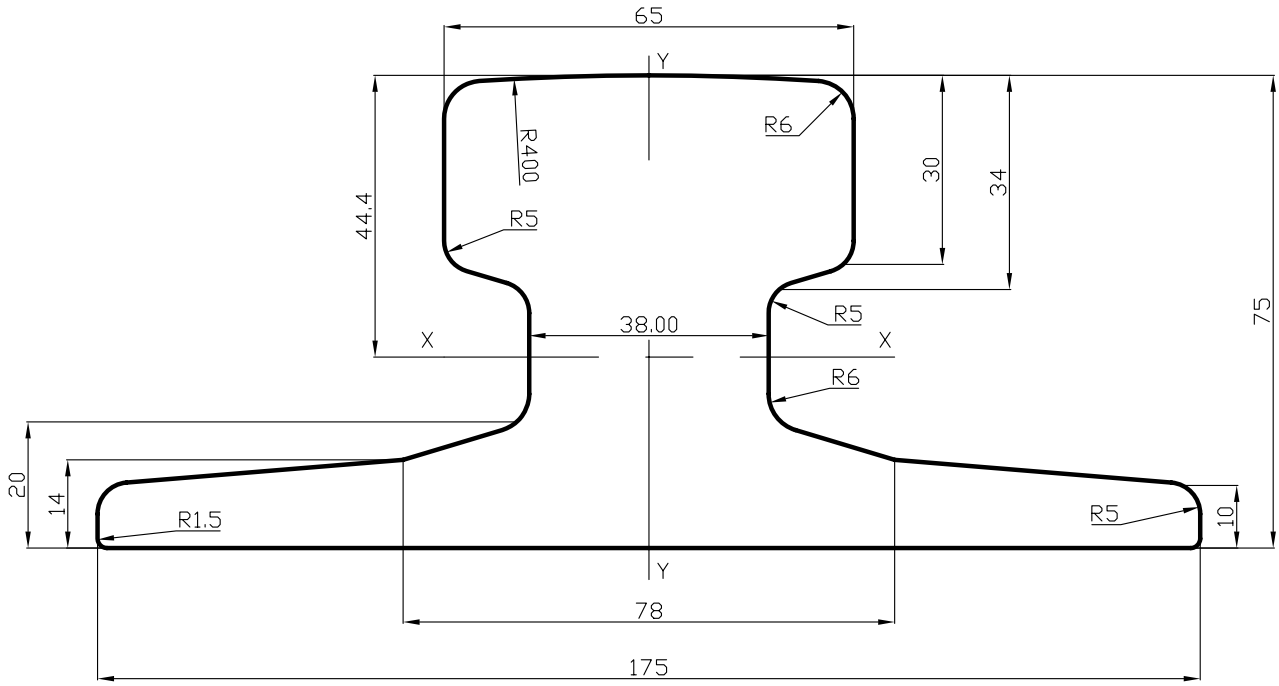

A65

Mass		43,50 kg/m	Scale 1:1.2
Area		55,40 cm^2	
Moment of inertia	X-X	327,0 cm^4	
	Y-Y	609,0 cm^4	
Section modulus	X-X Head	73,7 cm^3	
	X-X Base	105,3 cm^3	
	Y-Y Axis	69,6 cm^3	